PXP6010/08P/CR/0507 Datasheet

bulgin
an INFINITE brand

Product Name // Flex Cable Connector PXP6010 Series 8 Contact Plug Crimp/Solder Termination (contacts available separately) 5mm-7mm Cable (White Gland) Plastic Body

View Product Page

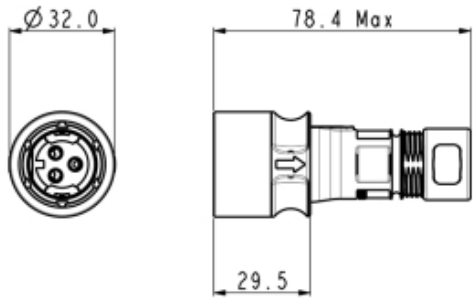

// Product Description:

- Flex Cable Connectors
- Water and dustproof to IP66, IP68, IP69K when mated with compatible connector
- 30 degree push twist locking, tamperproof lock prevents accidental un-mating
- Plug
- 8 Contacts
- Crimp/solder termination with contacts and fitting tool available separately
- Plastic Body
- Cable acceptance 5mm-7mm diameter
- Gland Pack PXP6088 available separately to accomodate all sizes
- PXP6081 Sealing Cap available separately to maintain IP rating of unmated connectors
- Mate with PXP6011 Series Inline, PXP6012 and PXP6014 Series Front Panel Mount Connectors

// General Information:

Product Display Title:	Flex Cable Connectors
Product Family:	Circular Power Connectors
Product Series:	6000 Series Buccaneer
Approvals:	UL
Body Colour:	Grey
Body Material:	Polycarbonate/Polybutylene Terephthalate (PC/PBT)
Body Material Type:	Plastic Body
Contact Type:	Plug Contact
Coupling Type:	Push-Twist
Current Max:	10A, 4A, 7A
Diameter Over Coupling Ring Mm:	32mm
Flamability Rating:	UL94V-0
Function:	Flex Cable Connector
Insulation Resistance:	>10^6MΩ @500V DC
Ip Rating:	IP66, IP68, IP69K
Max Cable Entry Size:	7mm
Min Cable Entry Size:	5mm
Max Contact Accomodation Awg:	20AWG
Min Contact Accomodation Awg:	16AWG
Max Contact Accomodation Mm2:	1.5mm2
Min Contact Accomodation Mm2:	0.5mm2
Max Operating Temperature:	+120°C
Min Operating Temperature:	-40°C
Number Of Contacts:	8 Contacts
Rohs Compliant:	Yes
Salt Spray Corrosion Test:	EN60068-2-52 Test Kb Salt Mist (Cyclic) Marine Severity Level 1
Voltage Max:	277V

// Product PDF Links

- 6000 Series power connectors...
- 6000 Series metal body power...

// Product 3D CAD Model Links

- PXP6010/08P/CR/05073D CAD Model