PXMBNI12RPF08APCM16 Datasheet

Product Name // M12 Series A Code Brass Nickel Plated M16 Rear Panel Mount Connector 8 Contact Socket PCB Termination

View Product Page

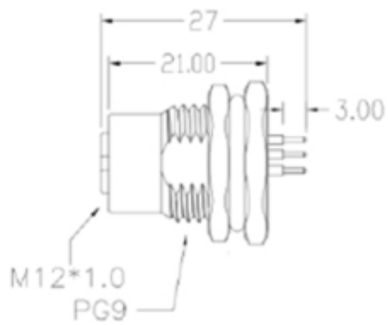

// Product Description:

- M12 Series Rear Panel Mount Connectors
- Water and dustproof to IP67 when mated with compatible connector
- Pin or Socket
- 3, 4, 5, 8, 12 Contact (3, 8, 12 Contact are A Code, 4 Contact are choice of A Code or D Code, 5 Contact are choice of A Code or B Code)
- PCB Terminals
- Choice of mounting nut sizes, depending on part code
- Choice of Sealing Caps available separately to maintain IP rating of unmated connectors
- Mate with M12 Series Inline Body and Flex Body Connectors, depending on part code

// General Information:

Product Display Title:	M12 Series Rear Panel Mount Connectors
Product Family:	Circular Automation Connectors
Product Series:	M12 Series
Approvals:	CSA, UL
Body Material:	Brass - Nickel Plated
Contact Type:	Socket Contact
Coupling Type:	Screw
Current Max:	2A
Diameter Over Coupling Ring Mm:	20mm
Function:	Rear Panel Mount Connector
Ip Rating:	IP67
M12 Series Mounting Nut:	M16
Max Operating Temperature:	+80°C
Min Operating Temperature:	-25°C
Number Of Contacts:	8 Contacts
Pin Layout Code:	A Code
Rohs Compliant:	Yes
Thread Size:	M12 x 1
Voltage Max:	30V

// Product PDF Links

M12 Series automation connectors...

// Product 3D CAD Model Links

PXMBNI12RPF08APCM163D CAD Model