# PXM6010/02S/ST/0910/SN Datasheet

bulgin
an INFINITE brand

## Product Name // Flex Cable Connector PXM6010 Series 2 Contact Socket Screw Termination (contacts supplied fitted) 9mm-10mm Cable (Light Grey Gland) Metal Body With Braid Termination

View Product Page

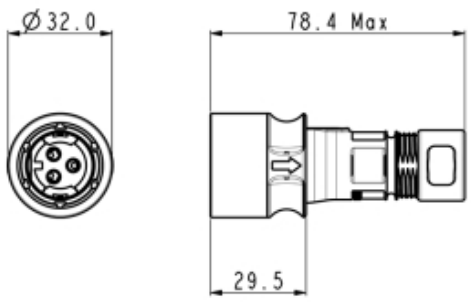


## // Product Description:

- Flex Cable Connectors
- Water and dustproof to IP66, IP68, IP69K when mated with compatible connector
- 30 degree push twist locking, tamperproof lock prevents accidental un-mating
- Socket
- 2 Contacts
- Screw contacts supplied fitted
- Metal Body With Braid Termination
- Cable acceptance 9mm-10mm diameter
- Gland Pack PXP6088 available separately to accomodate all sizes
- PXM6081 Sealing Cap available separately to maintain IP rating of unmated connectors
- Mate with PXM6011 Series Inline and PXM6012 Series Front Panel Mount Connectors

## // General Information:

| | |
|---|---|
| Product Display Title: | Flex Cable Connectors |
| Product Family: | Circular Power Connectors |
| Product Series: | 6000 Series Buccaneer |
| Approvals: | UL |
| Body Colour: | Metallic Grey |
| Body Material: | Brass |
| Body Material Type: | Metal Body With Braid Termination |
| Contact Type: | Socket Contact |
| Coupling Type: | Push-Twist |
| Current Max: | 16A, 11A |
| Diameter Over Coupling Ring Mm: | 32mm |
| Function: | Flex Cable Connector |
| Insulation Resistance: | >$10^6$MΩ @500V DC |
| Ip Rating: | IP66, IP68, IP69K |
| Max Cable Entry Size: | 10mm |
| Min Cable Entry Size: | 9mm |
| Max Contact Accomodation Awg: | 14AWG |
| Min Contact Accomodation Awg: | 14AWG |
| Max Contact Accomodation Mm2: | 2.5mm2 |
| Min Contact Accomodation Mm2: | 2.5mm2 |
| Max Operating Temperature: | +120°C |
| Min Operating Temperature: | -40°C |
| Number Of Contacts: | 2 Contacts |
| Rohs Compliant: | Yes |
| Salt Spray Corrosion Test: | EN60068-2-11 Test Ka Salt Mist |
| Voltage Max: | 277V |

### // Product PDF Links

6000 Series power connectors...

6000 Series metal body power...

### // Product 3D CAD Model Links

PXM6010/02S/ST/0910/SN3D CAD Model